Bellow differential pressure gauge
Model D100

Nominal size 150 mm
Accuracy: Class 1.6(1.6%)

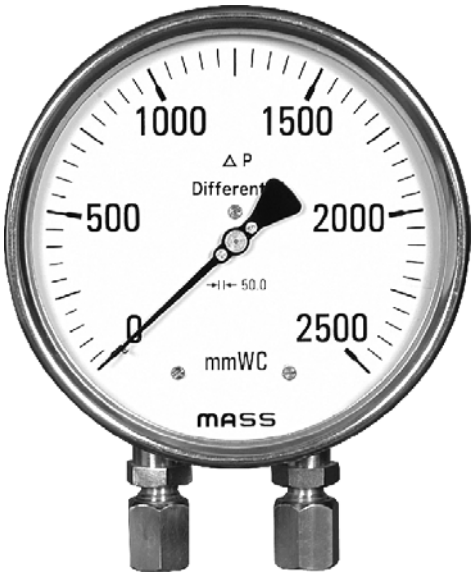

Features
- Stainless steel case and wetted parts
- Static pressure 10 times of the range
- Protection IP65
- High corrosive resistance
- Dry or liquid filled

Ranges
0 ... 600 mmWC up to 0 ... 10 kg/cm2

Applications
Chemical and petrochemical industry
Machine and apparatus construction
Food and beverage industry
Pulp and paper industry

Technical specification	D100
Dial size [mm]	150
Construction	Open front cylindrical case with bayonet ring
Measuring principle Range [mmWC] [kg/cm^2] Max. static pressure pressure ranges static pressure [kg/cm^2] Pressure type	Twin bellow 600 1000 1600 2500 4000 0,6 1 1.6 2.5 4 6 10 Static pressure is also maximum pressure allowed on one side, refer below 600 to 2000 mmWC / 2000 to 5000 mmWC / 0.6 to 1.6 kg/cm^2 / 2 to 6 kg/cm^2 / 10 kg/cm^2 4 / 6 / 20 / 40 / 100 Differential
Process connection	1/4" 1/2" NPT (F), 1/4" 3/8" 1/2" BSP / NPT (M), M20x1.5(M), others on request
Connection location	Lower, 90° lower, back
Material Pressure connection Measuring bellow Case/bayonet ring Window Dial Pointer	 Stainless steel 316L Stainless steel 316L Stainless steel 304, optional 316L Laminated safety glass optional acrylic glass Aluminum, black markings on white background Aluminum, black, optional Micrometer Adjustment
Accuracy calibrated ascending	Class 1.6 (1.6 % F.S.) optional 1.0 (1.0 % F.S.)
Permissible Ambient temperature Medium temperature Storage temperature Effect	 -20 ... 80 °C Max. 100 °C -40 ... 60 °C Max. 0,3 % / 10 K
Protection	IP65
Filling liquids	Glycerin, silicone, others on request
Mounting	Wall mounting, optional 2" pipe mounting, others on request
Weight dry/filled [kg]	
Accessories, options	3 or 5 way remote or direct mounted manifolds, valves, diaphragm seals, electrical contacts

All specifications are subject to change without notice.

General dimensions in mm

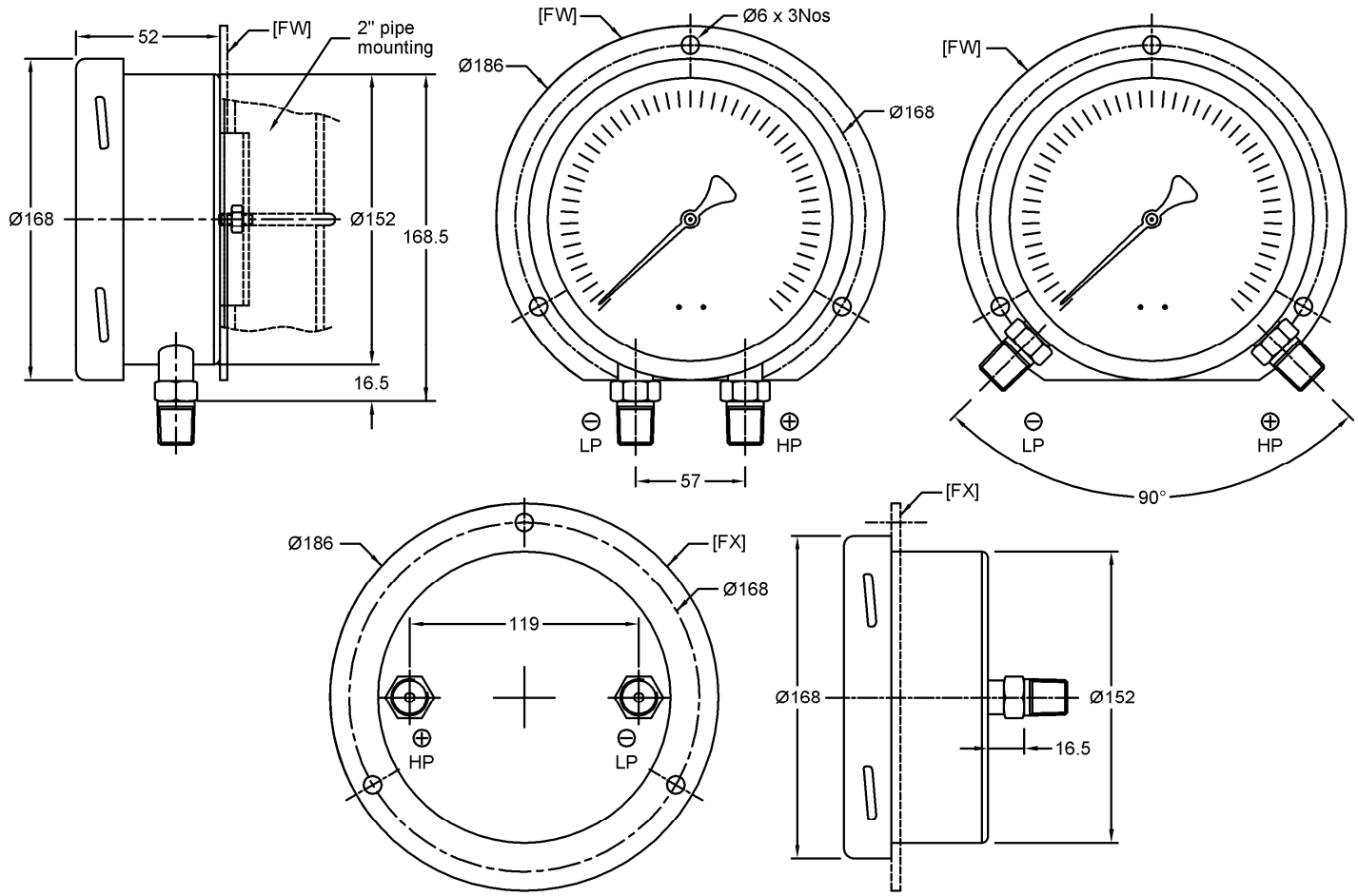

Order information

Size	Type	System material	Execution	Process connection	Connection orientation	Range	Engineering units	Filling/case material	Options
(150) 150mm	**D100**	**(S)** 316L process connection and bellow	**(L)** IP65	**(25)** 1/4" NPT (F) **(50)** 1/2" NPT (F) **(04)**1/2" NPT (M) **(03)**3/8" NPT (M) **(02)**1/4" NPT (M) **(15)**1/2" BSP (M) **(14)**3/8" BSP(M) **(13)**1/4" BSP(M) **(16)**M20x1.5(M)	**(L)** Lower **(N)** 90° Lower **(B)** Back	**0/ 600** **0/ 1000** **0/ 1600** **0/ 2500** **0/ 4000** **0/ 0,6** **0/ 1** **0/ 1,6** **0/ 2,5** **0/ 4** **0/ 6** **0/ 10**	**(mmWC)** **(kg/cm2)** psi and others on request compound ranges on request	**(=)** Standard no filling **(GV)** Silicone **(GR)** Glycerin **(GX)** Halocarbon **(YW)** Case material 316L **(EC)** Contact type and function (see EC.1)[1]	**(NH)** Tagging wired **(DA)** Dial marking **(CS)** Dual scale **(OF)** Oil free **(MP)** Micrometer pointer **(FX)** Front panel **(FW)** Surface plate **(TM)** 2" pipe mounting **(AN)** Calibration 1 % F.S.

1) Specify details

How to order

Size	Type	System material	Execution	Process connection	Connection orientation	Range	Engineering unit	Filling/Case material	Option
150	D100	S	L	04	L	0/600	mmWC	=	NH

Ashcroft India Pvt. Ltd.
Plot No.: 2306, G.I.D.C. Chhatral, Ta: Kalol, Dist.: Gandhinagar,
CHHATRAL 382 729 , Gujarat, INDIA.
Telephone: +91 (0) 2764 233681/82/83 Fax: +91-2764-233440
Email: sales@ashcroftindia.com www.ashcroftindia.com

- North Zone : sales.delhi@ashcroftindia.com
- East zone : sales.kolkata@ashcroftindia.com
- West zone : sales.mumbai@ashcroftindia.com
- South zone : sales.chennai@ashcroftindia.com